BLUSTREAM

Example Schematic

HMX44-18G

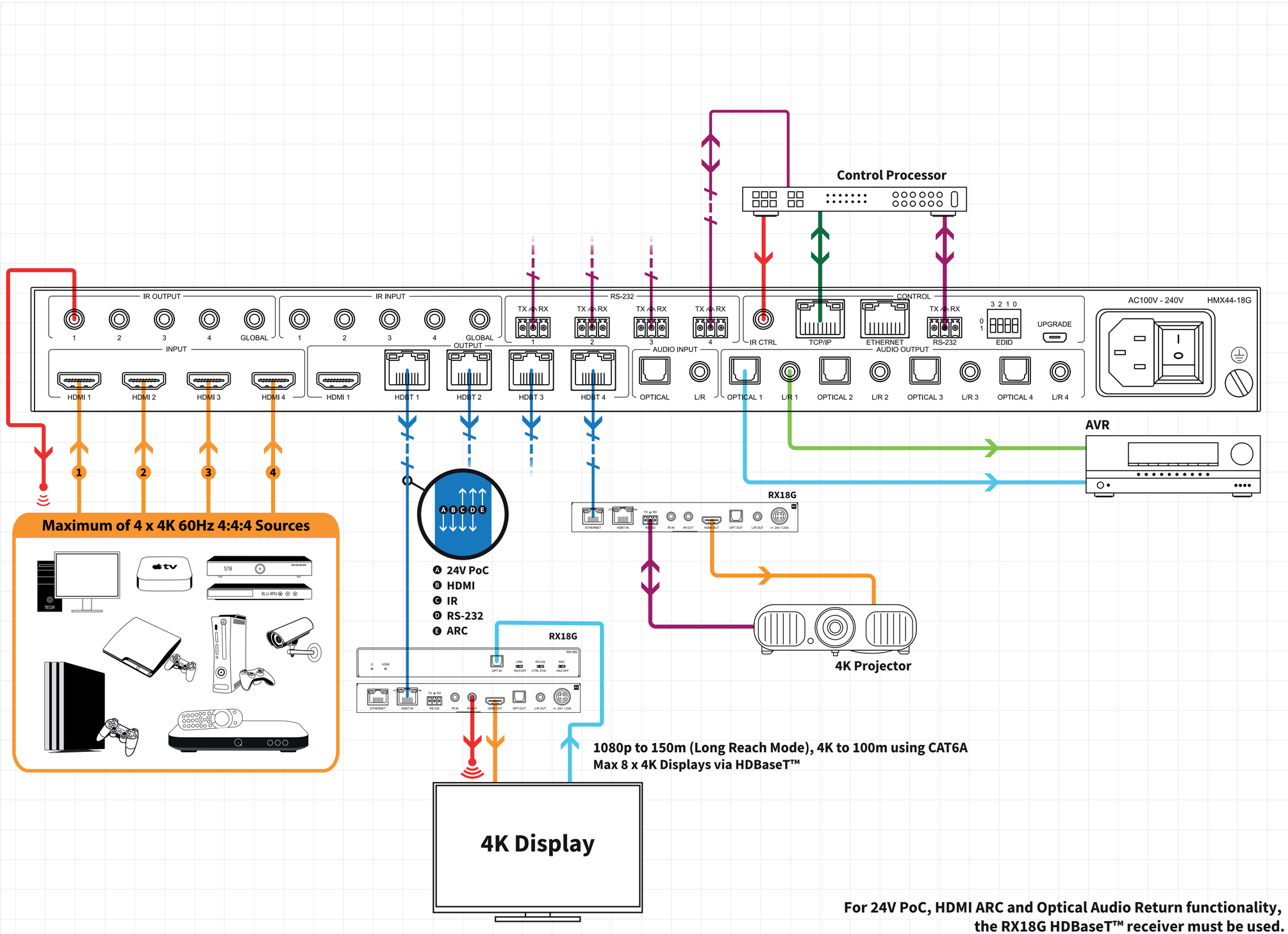

RS-232
HDMI
CAT6A Cable
Network Connection
Optical Digital
Stereo Audio
IR

For 24V PoC, HDMI ARC and Optical Audio Return functionality, the RX18G HDBaseT™ receiver must be used.