PRELIMINARY

K-ARRAY
Unique Audio Solutions

Mugello-KH2I

Small-format line array element
with electronic beam steering

Description

Incredibly flat and lightweight, the new Mugello-KH2I is the smaller line array element in K-array Mugello Series. The self-powered speaker is comprised of two 8" neodymium magnet woofers each with a 2.5" voice coil and two compression drivers with a 2.5" voice coil.
The four-channel Class-D amplifier module delivering 1500W @ 4Ω per channel makes it possible to drive up to 3x Mugello-KH2P I passive line array elements with just one self powered Mugello-KH2I.

The Slim Array Technology of the Mugello-KH2I allows for a better impulse response and guarantees unique cardioid polar pattern over its entire frequency range. Along with the mechanical steering, K-array's Electronic Beam Steering technology gives the Mugello-KH2I the ability to digitally adjust the dispersion of the sound beams to ensure the perfect aiming of the sound field.

- 2x 8" neodymium magnet woofers with 2.5" voice coil
- 2x horn loaded compression drivers with 2.5" voice coil
- 4-ch Class-D amp module 1500W @ 4Ω per channel
- Built-in DSP featuring
  - Channel Grouping: group controls over multiple channels
  - Input EQ: 3 bands fully parametric equalizer
  - Output EQ: 8 bands fully parametric selectable filters: Peaking, High-Shelf, Low-Shelf, High-Pass, Low-Pass, HP-Butterworth, LP-Butterworth
  - FIR filters for digital steering
  - Dynamic limiters
  - Signal routing: freely assignable input-to-output signal path with level adjustment
  - Channel delay up to 230ms
- Remote control via web app or dedicated K-framework3 tuning, monitoring and acoustical simulation software
- Accessories available for ground stacking and suspended array configurations
- Mechanically compatible with Thunder-KS line subwoofers
- Available in black and custom RAL color

Suspended configurations with optional flybars and sobwoofers.

Mugello-KH2I

Technical specifications	
Type	Self powered line array element
Transducers	2x 8" neodymium magnet woofers with 2.5" voice coil 2x horn loaded compression drivers with 2.5" voice coil
Frequency Response [1]	120 Hz – 19 kHz (-6 dB)
Max SPL [2]	142 dB peak
Coverage	V. 20° digitally adjustable in array I H. 110°
Connectors	Line Input: 2x XLR-F analog balanced / AES3 input Line Output: 2x XLR-M Link analog balanced / AES3 output Speaker Output: 2x SpeakON NL4 (Ch1 1+/1- // Ch2 2+/2-) Mains: powerCON TRUE1 TOP, 16 A true mains Networking and Data: 1x RJ45, 4x USB-A
DSP	Input gain, routing matrix, delay, full parametric IIR filters (Peaking, Shelving, Hi/Lo pass, Hi/Lo Butterworth), FIR filters Onboard preset, Remote monitoring
Remote Control	Ethernet connectivity: Web APP and K-framework3 software
Amplifier Module	4-channel switching mode, Class D
Output Power	4x 1500 W @ 4 Ω
MAINS Operating Range	100-240V AC, 50-60 Hz with PFC
Power Consumption	600 W @ 8 Ω load, Pink noise, 1/4 rated power
Protections	Over Temp. (Power Limiting – Thermal Shutdown), Short Circuit/ Overload Output Protection, Power Limiting, Clip Limiter/Permanent Signal Limiter, High Frequency Protection
Rear Panel	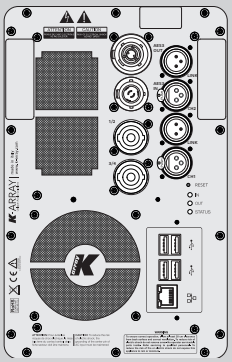

Handling & Finishes	
Material	Polyurea coated birch plywood
Colors	Black, Custom RAL
IP Rating	IP53
Dimensions (WxHxD)	net dimensions: 735 x 285 x 200 mm (28,94 x 11.22 x 7.87 in) with rigging hardware : 831 x 285 x 210 mm (32.7 x 11.22 x 8.27 in)
Weight	29 kg / 63.93 lb with rigging hardware

[1] With dedicated preset.
[2] Maximum SPL is calculated using a signal with crest factor 4 (12dB) measured at 8 m then scaled at 1 m.

Accessories	
K-HCFLY2I	Flybar for suspended installations
K-STEPM2I	Flybar for step array suspended installations
K-HCBASE2	Ground stacking hardware for KH2I / KH2PI
K-HCFLYST2	Straight cluster fly bar for KH2I / KH2PI
K-HCLINK2/35	Adapter for joining KH2I at the bottom of a cluster of KH3I or KH5I

K-framework3 is the managing and control software dedicated to professionals and operators looking for a powerful tool for designing and managing a large number of units over a wired LAN in demanding applications.

WINDOWS and OSX software
K-framework3
click to go

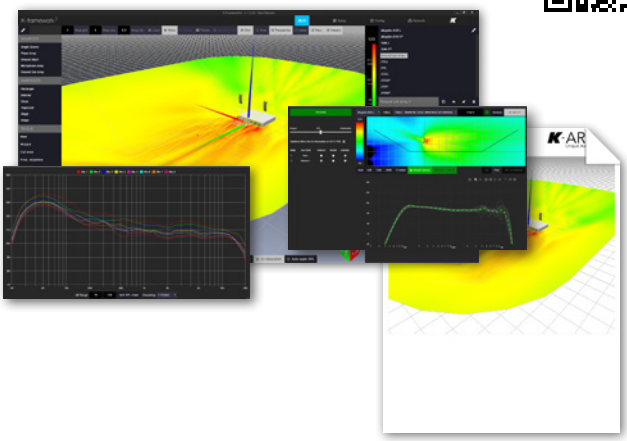

The on-board web interface is a further user interface embedded on the built-in DSP allowing the user to manage the device features over a network.

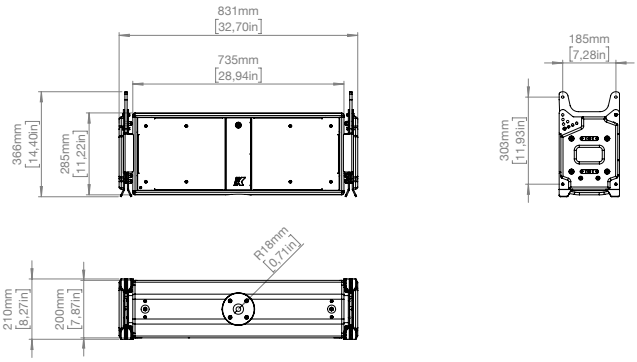

Notes:
Passive loudspeakers require dedicated presets loaded onboard K-array amplifiers.
New materials and designs are introduced into existing products without previous notice.
Present systems may differ in some respects from those presented in this catalog.